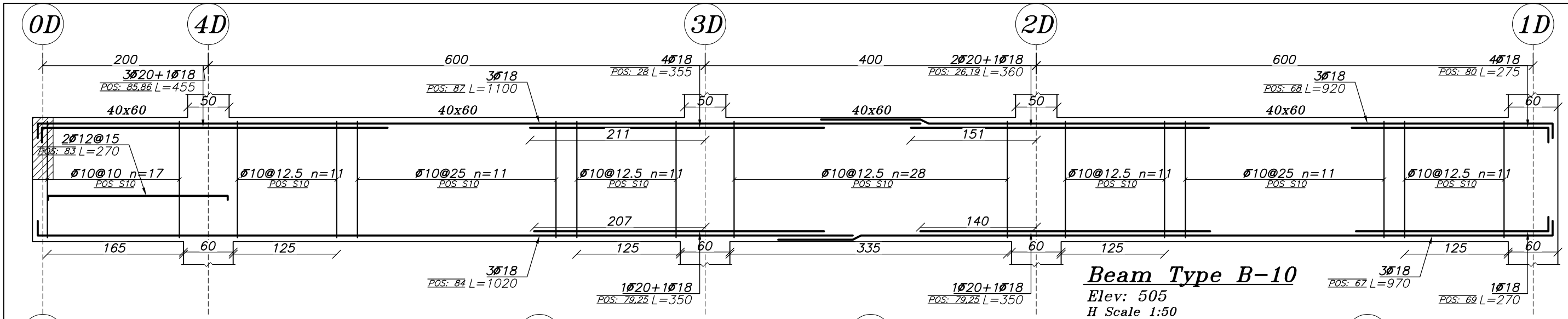

Beam Type B-10

Elev: 505
H Scale 1:50
V Scale 1:20

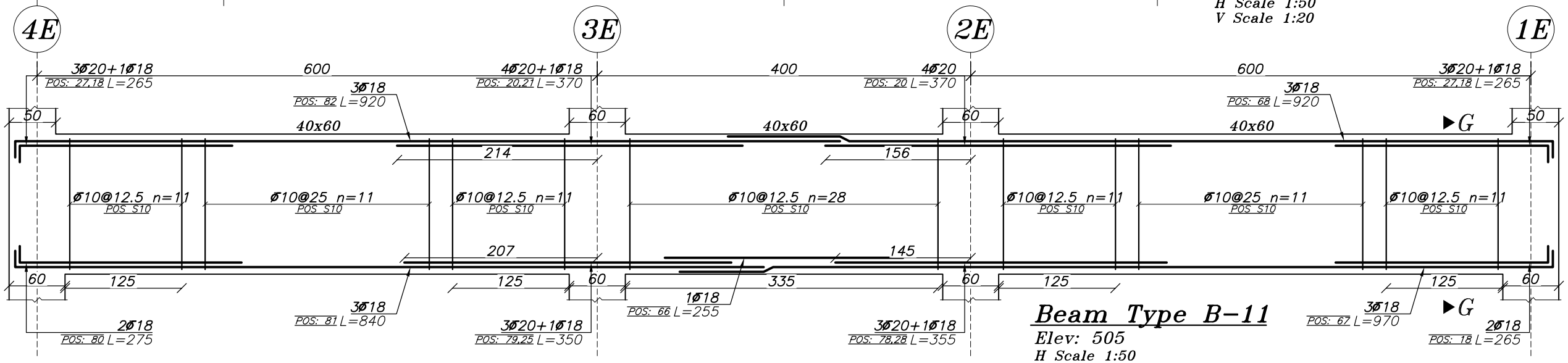

Beam Type B-11

Elev: 505
H Scale 1:50
V Scale 1:20

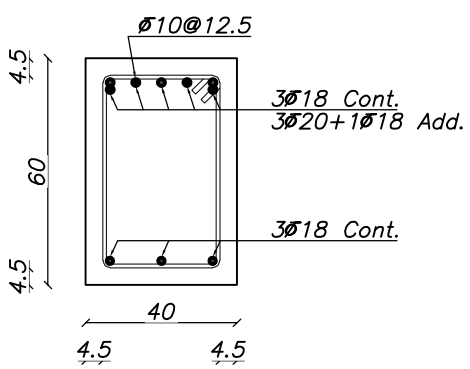

Sec. E-E

Scale 1:20

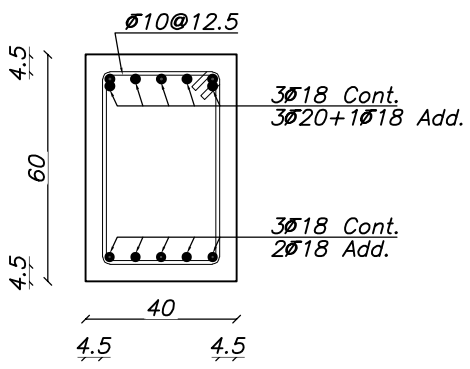

Sec. G-G

Scale 1:20

DWG NO. S-19